VERSA-LINE

Submittal

Style VA-X / VB-X
Versa-Line
Copper/Aluminum and
Steel Element Ratings

Specification

☐ **VA-X Flat Top Element Supported Enclosure**

ENCLOSURE:

STYLE: Flat Top
OUTLET: 3/4" Sq. Perf

LENGTHS: 2'0" thru 8'0" in 6" Increments
MAT'L:
- ☐ 18 Ga. CRS (Std)
- ☐ 16 Ga. CRS (Opt'l)
- ☐ 14 Ga. CRS (Opt'l)
- ☐ 18 Ga. Stainless Steel (Opt'l)
- ☐ 16 Ga. Stainless Steel (Opt'l)
- ☐ 14 Ga. Stainless Steel (Opt'l)
- ☐ 16 Ga. Aluminum (Opt'l)
- ☐ 14 Ga. Aluminum (Opt'l)
- ☐ 12 Ga. Aluminum (Opt'l)

HEIGHT:
- ☐ 5 5/8" (VA-X only)
- ☐ 6 1/8" (VB-X only)
- ☐ 11 5/8" (VA-X only)
- ☐ 12 1/8" (VB-X only)
- ☐ 17 5/8" (VA-X only)
- ☐ 18 1/8" (VB-X only)

FINISH:
- ☐ Baked Powder (Std)
- ☐ Baked Metallic (Opt'l)

ELEMENT:

TYPE: ☐ Cu/AL (Mechanically Expanded)
LENGTHS: 2'0" thru 12'6" in 1" Increments for 1" & 1-1/4" Cu.
2'0" thru 8'0" in 1" Increments for 3/4" Cu.

One End Flared (Std)

TYPE: ☐ IPS Steel (Mechanically Expanded)
LENGTHS: 2'0" thru 12'6" in 1" Increments
- ☐ NPT Thread both Ends (Std)
- ☐ Beveled Ends for Field Weld (Opt'l)

See Catalog for Working Pressures

☐ **VB-X Flat Top Element Supported Enclosure**

BACKPLATE:

TYPE: Not Applicable

BRACKETS:

- ☐ Wall Mtd B.B. Hngr (Copper or steel elements)
- ☐ Pipe & Cover Supports (Steel elements only)

ACCESSORIES:

☐ All Overlapping Type

☐ VA-X

ELEMENT TUBE SIZE	FIN SIZE HEIGHT x WIDTH	CRADLE NUMBER	A	B
3/4 COPPER	3 1/4 x 3 1/4	2	7 3/16	6 3/8
1" COPPER	3 1/4 x 3 1/4	2	7 3/16	6 3/16
1 1/4 COPPER	3 1/4 x 3 1/4	1	7 3/16	6 3/4
1" STEEL	3 1/4 x 3 1/4	2	7 3/16	6 1/16
1 1/4 STEEL	3 1/4 x 3 1/4	1	7 3/16	6 9/16

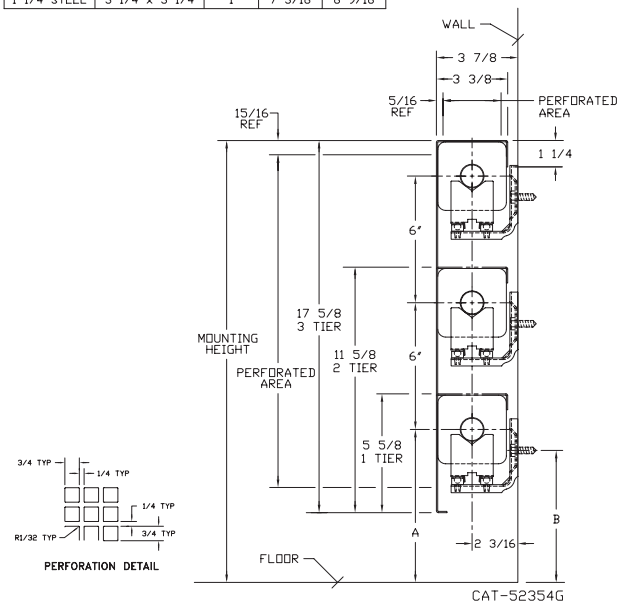

☐ VB-X

ELEMENT TUBE SIZE	FIN SIZE HEIGHT x WIDTH	CRADLE NUMBER	A	B
3/4 COPPER	3 5/8 x 4 1/4	2	7 1/2	6 11/16
	4 1/4 x 4 1/4	3A	7 3/16	5 15/16
1" COPPER	3 5/8 x 4 1/4	2	7 1/2	6 1/2
	4 1/4 x 4 1/4		7 3/16	6 3/16
1 1/4 COPPER	3 5/8 x 4 1/4	2	7 1/2	6 3/8
	4 1/4 x 4 1/4		7 3/16	6 1/16
1" STEEL	4 1/4 x 4 1/4	2	7 3/16	6 1/16
1 1/4 STEEL	4 1/4 x 4 1/4	2	7 3/16	5 7/8
2" STEEL	4 1/4 x 4 1/4	1	7 3/16	6 1/8

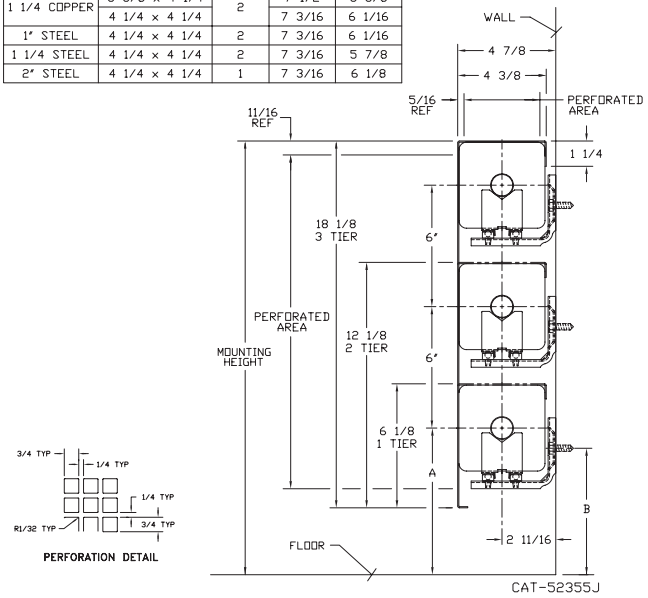

STERLING®
COMMERCIAL HYDRONIC PRODUCTS
260 North Elm St., Westfield, MA 01085
(413) 564-5535 Fax: (413) 562-8437
www.sterlingheat.com

MADE IN THE USA

10/22

PROJECT: _____ **DATE:** _____
LOCATION: _____
ARCHITECT: _____
ENGINEER: _____
CONTRACTOR: _____
PO NUMBER: _____

STYLE "VA-X / VB-X" VERSA-LINE

COPPER/ALUMINUM ELEMENTS

ALL RATINGS ARE IN BTU/HR/LIN FT AND BASED ON 3 FPS VELOCITY, 65° EAT

TUBE SIZE	CATALOG DESIGNATION	FIN SIZE HEIGHT X WIDTH	FINS PER FT.	FIN THICKNESS IN INCHES	ENCL DEPTH AND HEIGHT IN INCHES	TIERS AND CENTERS IN INCHES	MOUNTING HEIGHT IN INCHES	STEAM 215° FACTOR	HOT WATER (AVG.) 200°	190°	180°	170°	160°	150°	140°	130°	120°
									CORRECTION FACTORS FOR AVERAGE WATER TEMPERATURES								
								1.00	0.86	0.78	0.69	0.61	0.53	0.45	.40	.33	.26
3/4"	C3/4-33	3-1/4" SQ.	32	.020	5A	1	8-7/8	930	800	730	640	570	490	420	370	310	240
					11A	2 @ 6 CL	14-7/8	1650	1420	1290	1140	1010	870	740	660	540	430
					17A	3 @ 6 CL	20-7/8	2310	1990	1800	1590	1410	1220	1040	920	760	600
3/4"	C3/4-34	3-1/4" SQ.	40	.020	5A	1	8-7/8	1090	940	850	750	660	580	490	440	360	280
					11A	2 @ 6 CL	14-7/8	1800	1550	1400	1240	1100	950	810	720	590	470
					17A	3 @ 6 CL	20-7/8	2470	2120	1930	1700	1510	1310	1110	990	820	640
3/4"	C3/4-35	3-1/4" SQ.	50	.020	5A	1	8-7/8	1210	1040	940	830	740	640	540	480	400	310
					11A	2 @ 6 CL	14-7/8	1930	1660	1510	1330	1180	1020	870	770	640	500
					17A	3 @ 6 CL	20-7/8	2580	2220	2010	1780	1570	1370	1160	1030	850	670
1"	C33	3-1/4" SQ.	32	.020	5A	1	8-7/8	930	800	730	640	570	490	420	370	310	240
					11A	2 @ 6 CL	14-7/8	1650	1420	1290	1140	1010	870	740	660	540	430
					17A	3 @ 6 CL	20-7/8	2280	1960	1780	1570	1390	1210	1030	910	750	590
1"	C34	3-1/4" SQ.	40	.020	5A	1	8-7/8	1040	890	810	720	630	550	470	420	340	270
					11A	2 @ 6 CL	14-7/8	1780	1530	1390	1230	1090	940	800	710	590	460
					17A	3 @ 6 CL	20-7/8	2390	2060	1860	1650	1460	1270	1080	960	790	620
1"	C35	3-1/4" SQ.	50	.020	5A	1	8-7/8	1160	1000	900	800	710	610	520	460	380	300
					11A	2 @ 6 CL	14-7/8	1860	1600	1450	1280	1130	990	840	740	610	480
					17A	3 @ 6 CL	20-7/8	2500	2150	1950	1720	1530	1330	1130	1000	830	650
1-1/4"	C133	3-1/4" SQ.	32	.020	5A	1	8-7/8	930	800	730	640	570	490	420	370	310	240
					11A	2 @ 6 CL	14-7/8	1610	1380	1260	1110	980	850	720	640	530	420
					17A	3 @ 6 CL	20-7/8	2270	1950	1770	1570	1380	1200	1020	910	750	590
1-1/4"	C134	3-1/4" SQ.	40	.020	5A	1	8-7/8	1020	880	800	700	620	540	460	410	340	270
					11A	2 @ 6 CL	14-7/8	1770	1520	1380	1220	1080	940	800	710	580	460
					17A	3 @ 6 CL	20-7/8	2350	2020	1830	1620	1430	1250	1060	940	780	610
1-1/4"	C135	3-1/4" SQ.	50	.020	5A	1	8-7/8	1120	960	870	770	680	590	500	450	370	290
					11A	2 @ 6 CL	14-7/8	1820	1570	1420	1260	1110	960	820	730	600	470
					17A	3 @ 6 CL	20-7/8	2450	2110	1910	1690	1490	1300	1100	980	810	640
3/4"	C3/4-433	3-5/8" X 4-1/4"	32	.020	6B	1	9-3/8	1160	1000	900	800	710	610	520	460	380	300
					12B	2 @ 6 CL	15-3/8	2040	1750	1590	1410	1240	1080	920	820	670	530
					18B	3 @ 6 CL	21-3/8	2760	2370	2150	1900	1680	1460	1240	1100	910	720
3/4"	C3/4-434	3-5/8" X 4-1/4"	40	.020	6B	1	9-3/8	1390	1200	1080	960	850	740	630	560	460	360
					12B	2 @ 6 CL	15-3/8	2390	2060	1860	1650	1460	1270	1080	960	790	620
					18B	3 @ 6 CL	21-3/8	3170	2730	2470	2190	1930	1680	1430	1270	1050	820
3/4"	C3/4-435	3-5/8" X 4-1/4"	50	.020	6B	1	9-3/8	1540	1320	1200	1060	940	820	690	620	510	400
					12B	2 @ 6 CL	15-3/8	2540	2180	1980	1750	1550	1350	1140	1020	840	660
					18B	3 @ 6 CL	21-3/8	3310	2850	2580	2280	2020	1750	1490	1320	1090	860
1"	C433	3-5/8" X 4-1/4"	32	.020	6B	1	9-3/8	1210	1040	940	830	740	640	540	480	400	310
					12B	2 @ 6 CL	15-3/8	2130	1830	1660	1470	1300	1130	960	850	700	550
					18B	3 @ 6 CL	21-3/8	2880	2480	2250	1990	1760	1530	1300	1150	950	750
1"	C434	3-5/8" X 4-1/4"	40	.020	6B	1	9-3/8	1350	1160	1050	930	820	720	610	540	450	350
					12B	2 @ 6 CL	15-3/8	2320	2000	1810	1600	1420	1230	1040	930	770	600
					18B	3 @ 6 CL	21-3/8	3070	2640	2390	2120	1870	1630	1380	1230	1010	800
1"	C435	3-5/8" X 4-1/4"	50	.020	6B	1	9-3/8	1540	1320	1200	1060	940	820	690	620	510	400
					12B	2 @ 6 CL	15-3/8	2530	2180	1970	1750	1540	1340	1140	1010	830	660
					18B	3 @ 6 CL	21-3/8	3310	2850	2580	2280	2020	1750	1490	1320	1090	860
1-1/4"	C1433	3-5/8" X 4-1/4"	32	.020	6B	1	9-3/8	1260	1080	980	870	770	670	570	500	420	330
					12B	2 @ 6 CL	15-3/8	2220	1910	1730	1530	1350	1180	1000	890	730	580
					18B	3 @ 6 CL	21-3/8	3000	2580	2340	2070	1830	1590	1350	1200	990	780
1-1/4"	C1434	3-5/8" X 4-1/4"	40	.020	6B	1	9-3/8	1380	1190	1080	950	840	730	620	550	460	360
					12B	2 @ 6 CL	15-3/8	2370	2040	1850	1640	1450	1260	1070	950	780	620
					18B	3 @ 6 CL	21-3/8	3130	2690	2440	2160	1910	1660	1410	1250	1030	810
1-1/4"	C1435	3-5/8" X 4-1/4"	50	.020	6B	1	9-3/8	1540	1320	1200	1060	940	820	690	620	510	400
					12B	2 @ 6 CL	15-3/8	2540	2180	1980	1750	1550	1350	1140	1020	840	660
					18B	3 @ 6 CL	21-3/8	3320	2860	2590	2290	2030	1760	1490	1330	1100	860
3/4"	C3/4 43	4-1/4" SQ.	32	.020	6B	1	9-3/8	1290	1110	1010	890	790	680	580	520	430	340
					12B	2 @ 6 CL	15-3/8	2250	1940	1760	1550	1370	1190	1010	900	740	590
					18B	3 @ 6 CL	21-3/8	3070	2640	2390	2120	1870	1630	1380	1230	1010	800
3/4"	C3/4 44	4-1/4" SQ.	40	.020	6B	1	9-3/8	1540	1320	1200	1060	940	820	690	620	510	400
					12B	2 @ 6 CL	15-3/8	2440	2100	1900	1680	1490	1290	1100	980	810	630
					18B	3 @ 6 CL	21-3/8	3200	2750	2500	2210	1950	1700	1440	1280	1060	830
3/4"	C3/4 45	4-1/4" SQ.	50	.020	6B	1	9-3/8	1580	1360	1230	1090	960	840	710	630	520	410
					12B	2 @ 6 CL	15-3/8	2520	2170	1970	1740	1540	1340	1130	1010	830	660
					18B	3 @ 6 CL	21-3/8	3290	2830	2570	2270	2010	1740	1480	1320	1090	860
1"	C43	4-1/4" SQ.	32	.020	6B	1	9-3/8	1290	1110	1010	890	790	680	580	520	430	340
					12B	2 @ 6 CL	15-3/8	2280	1960	1780	1570	1390	1210	1030	910	750	590
					18B	3 @ 6 CL	21-3/8	3100	2670	2420	2140	1890	1640	1400	1240	1020	810

STYLE "VA-X / VB-X" VERSA-LINE

COPPER/ALUMINUM ELEMENTS

ALL RATINGS ARE IN BTU/HR/LIN FT AND BASED ON 3 FPS VELOCITY, 65° EAT

TUBE SIZE	CATALOG DESIGNATION	FIN SIZE HEIGHT X WIDTH	FINS PER FT.	FIN THICKNESS IN INCHES	ENCL DEPTH AND HEIGHT IN INCHES	TIERS AND CENTERS IN INCHES	MOUNTING HEIGHT IN INCHES	STEAM 215° FACTOR	HOT WATER (AVG.) 200°	190°	180°	170°	160°	150°	140°	130°	120°
									CORRECTION FACTORS FOR AVERAGE WATER TEMPERATURES								
								1.00	0.86	0.78	0.69	0.61	0.53	0.45	.40	.33	.26
1"	C44	4-1/4" SQ.	40	.020	6B	1	9-3/8	1430	1230	1120	990	870	760	640	570	470	370
					12B	2 @ 6 CL	15-3/8	2390	2060	1860	1650	1460	1270	1080	960	790	620
					18B	3 @ 6 CL	21-3/8	3190	2740	2490	2200	1950	1690	1440	1280	1050	830
1"	C45	4-1/4" SQ.	50	.020	6B	1	9-3/8	1610	1380	1260	1110	980	850	720	640	530	420
					12B	2 @ 6 CL	15-3/8	2540	2180	1980	1750	1550	1350	1140	1020	840	660
					18B	3 @ 6 CL	21-3/8	3320	2860	2590	2290	2030	1760	1490	1330	1100	860
1-1/4"	C143	4-1/4" SQ.	32	.020	6B	1	9-3/8	1340	1150	1050	920	820	710	600	540	440	350
					12B	2 @ 6 CL	15-3/8	2370	2040	1850	1640	1450	1260	1070	950	780	620
					18B	3 @ 6 CL	21-3/8	3230	2780	2520	2230	1970	1710	1450	1290	1070	840
1-1/4"	C144	4-1/4" SQ.	40	.020	6B	1	9-3/8	1590	1370	1240	1100	970	840	720	640	520	410
					12B	2 @ 6 CL	15-3/8	2570	2210	2000	1770	1570	1360	1160	1030	850	670
					18B	3 @ 6 CL	21-3/8	3350	2880	2610	2310	2040	1780	1510	1340	1110	870
1-1/4"	C145	4-1/4" SQ.	50	.020	6B	1	9-3/8	1640	1410	1280	1130	1000	870	740	660	540	430
					12B	2 @ 6 CL	15-3/8	2360	2030	1840	1630	1440	1250	1060	940	780	610
					18B	3 @ 6 CL	21-3/8	3070	2640	2390	2120	1870	1630	1380	1230	1010	800

Note: Copper tube furnished flared one end standard.

STEEL ELEMENTS

ALL RATINGS ARE IN BTU/HR/LIN FT AND BASED ON 3 FPS VELOCITY, 65° EAT

TUBE SIZE	CATALOG DESIGNATION	FIN SIZE HEIGHT X WIDTH	FINS PER FT.	FIN THICKNESS IN INCHES	ENCL DEPTH AND HEIGHT IN INCHES	TIERS AND CENTERS IN INCHES	MOUNTING HEIGHT IN INCHES	STEAM 215° FACTOR	HOT WATER (AVG.) 200°	190°	180°	170°	160°	150°	140°	130°	120°
									CORRECTION FACTORS FOR AVERAGE WATER TEMPERATURES								
								1.00	0.86	0.78	0.69	0.61	0.53	0.45	.40	.33	.26
1"	S33	3-1/4" SQ.	32	.032	5A	1	8-7/8	870	750	680	600	530	460	390	350	290	230
					11A	2 @ 6 CL	14-7/8	1520	1310	1190	1050	930	810	680	610	500	400
					17A	3 @ 6 CL	20-7/8	2110	1810	1650	1460	1290	1120	950	840	700	550
1"	S34	3-1/4" SQ.	40	.032	5A	1	8-7/8	950	820	740	660	580	500	430	380	310	250
					11A	2 @ 6 CL	14-7/8	1630	1400	1270	1120	990	860	730	650	540	420
					17A	3 @ 6 CL	20-7/8	2260	1940	1760	1560	1380	1200	1020	900	750	590
1"	S35	3-1/4" SQ.	50	.032	5A	1	8-7/8	1020	880	800	700	620	540	460	410	340	270
					11A	2 @ 6 CL	14-7/8	1720	1480	1340	1190	1050	910	770	690	570	450
					17A	3 @ 6 CL	20-7/8	2350	2020	1830	1620	1430	1250	1060	940	780	610
1-1/4"	S133	3-1/4" SQ.	32	.032	5A	1	8-7/8	860	740	670	590	520	460	390	340	280	220
					11A	2 @ 6 CL	14-7/8	1560	1340	1220	1080	950	830	700	620	510	410
					17A	3 @ 6 CL	20-7/8	2150	1850	1680	1480	1310	1140	970	860	710	560
1-1/4"	S134	3-1/4" SQ.	40	.032	5A	1	8-7/8	960	830	750	660	590	510	430	380	320	250
					11A	2 @ 6 CL	14-7/8	1630	1400	1270	1120	990	860	730	650	540	420
					17A	3 @ 6 CL	20-7/8	2160	1860	1680	1490	1320	1140	970	860	710	560
1-1/4"	S135	3-1/4" SQ.	50	.032	5A	1	8-7/8	990	850	770	680	600	520	450	400	330	260
					11A	2 @ 6 CL	14-7/8	1680	1440	1310	1160	1020	890	760	670	550	440
					17A	3 @ 6 CL	20-7/8	2190	1880	1710	1510	1340	1160	990	880	720	570
1"	S43	4-1/4" SQ.	32	.032	6B	1	9-3/8	1270	1090	990	880	770	670	570	510	420	330
					12B	2 @ 6 CL	15-3/8	2230	1920	1740	1540	1360	1180	1000	890	740	580
					18B	3 @ 6 CL	21-3/8	2930	2520	2290	2020	1790	1550	1320	1170	970	760
1"	S44	4-1/4" SQ.	40	.032	6B	1	9-3/8	1430	1230	1120	990	870	760	640	570	470	370
					12B	2 @ 6 CL	15-3/8	2350	2020	1830	1620	1430	1250	1060	940	780	610
					18B	3 @ 6 CL	21-3/8	3050	2620	2380	2100	1860	1620	1370	1220	1010	790
1"	S45	4-1/4" SQ.	50	.032	6B	1	9-3/8	1520	1310	1190	1050	930	810	680	610	500	400
					12B	2 @ 6 CL	15-3/8	2410	2070	1880	1660	1470	1280	1080	960	800	630
					18B	3 @ 6 CL	21-3/8	3100	2670	2420	2140	1890	1640	1400	1240	1020	810
1-1/4"	S143	4-1/4" SQ.	32	.032	6B	1	9-3/8	1170	1010	910	810	710	620	530	470	390	300
					12B	2 @ 6 CL	15-3/8	2210	1900	1720	1520	1350	1170	990	880	730	570
					18B	3 @ 6 CL	21-3/8	2910	2500	2270	2010	1780	1540	1310	1160	960	760
1-1/4"	S144	4-1/4" SQ.	40	.032	6B	1	9-3/8	1420	1220	1110	980	870	750	640	570	470	370
					12B	2 @ 6 CL	15-3/8	2340	2010	1830	1610	1430	1240	1050	940	770	610
					18B	3 @ 6 CL	21-3/8	3040	2610	2370	2100	1850	1610	1370	1220	1000	790
1-1/4"	S145	4-1/4" SQ.	50	.032	6B	1	9-3/8	1490	1280	1160	1030	910	790	670	600	490	390
					12B	2 @ 6 CL	15-3/8	2360	2030	1840	1630	1440	1250	1060	940	780	610
					18B	3 @ 6 CL	21-3/8	3070	2640	2390	2120	1870	1630	1380	1230	1010	800
2"	S242	4-1/4" SQ.	25	.032	6B	1	9-3/8	1090	940	850	750	660	580	490	440	360	280
					12B	2 @ 6 CL	15-3/8	1950	1680	1520	1350	1190	1030	880	780	640	510
					18B	3 @ 6 CL	21-3/8	2590	2230	2020	1790	1580	1370	1170	1040	850	670
2"	S243	4-1/4" SQ.	32	.032	6B	1	9-3/8	1270	1090	990	880	770	670	570	510	420	330
					12B	2 @ 6 CL	15-3/8	2140	1840	1670	1480	1310	1130	960	860	710	560
					18B	3 @ 6 CL	21-3/8	2790	2400	2180	1930	1700	1480	1260	1120	920	730

Notes: 1) Steel fins furnished as .032 thick, painted black.
2) NPT threads furnished on steel elements. Please use domestic fittings for proper installation.
3) The ends can be provided chamfered for field welded fittings when specified.

STYLE “VA-X / VB-X” VERSA-LINE

STYLE X ACCESSORIES

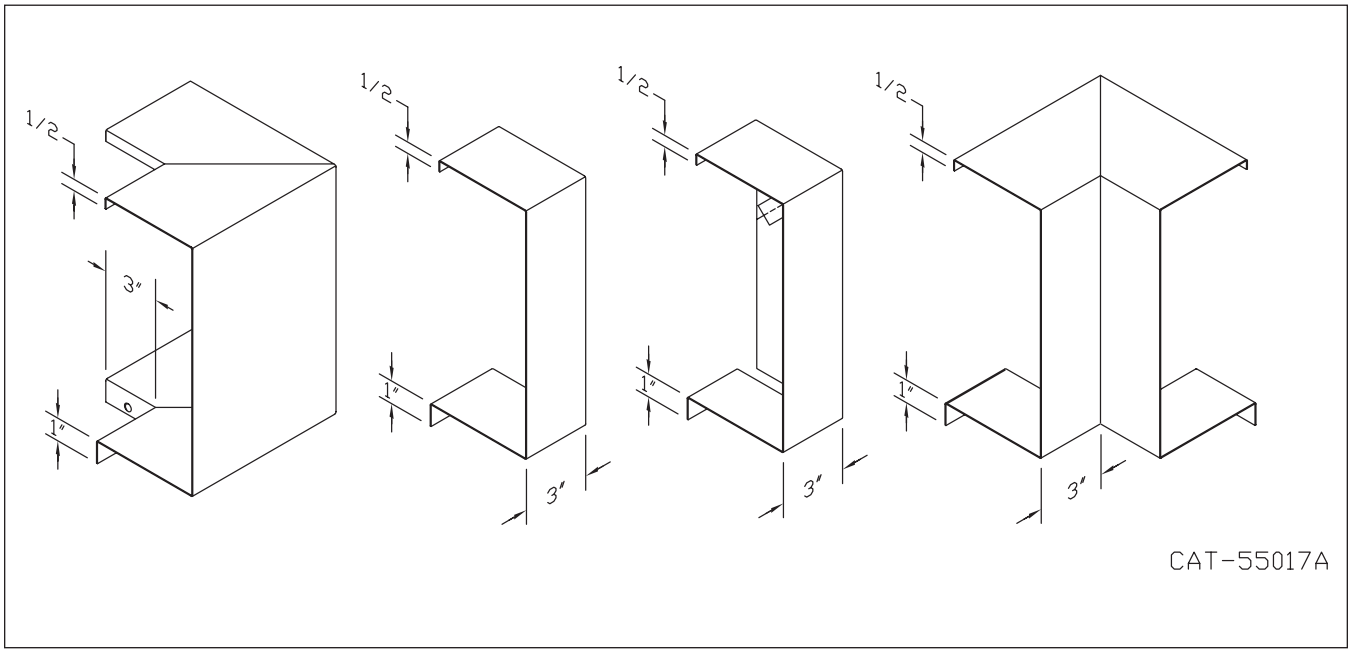

CEILING COVER

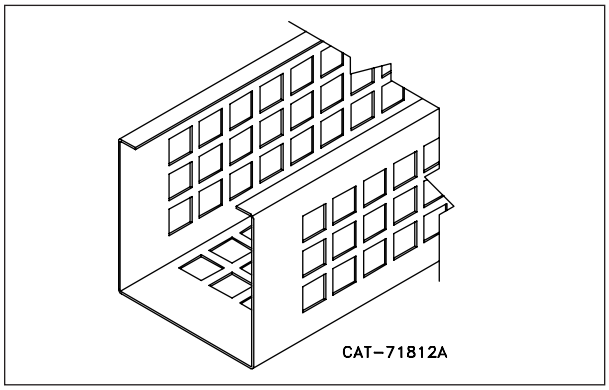

CEILING HANGER

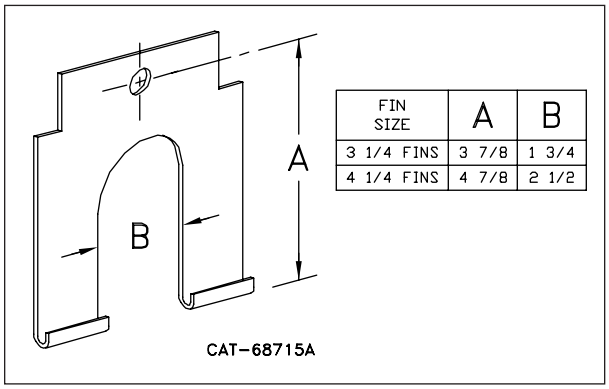

FIN SIZE	A	B
3 1/4 FINS	3 7/8	1 3/4
4 1/4 FINS	4 7/8	2 1/2

Design Data

COMMERCIAL FINNED TUBE CHARTS FOR RATING CORRECTIONS

For assistance with ratings and selection, please use our online Specifier.

CORRECTION FACTORS FOR WATER TEMPERATURES AND AIR TEMPERATURES OTHER THAN STANDARD

AVERAGE WATER TEMP. °F	ENTERING AIR TEMPERATURE °F														
	45	55	STD 65	70	75	80	85	90	95	100	110	120	130	140	150
90	.19	.13	.11	.06											
100	.25	.19	.15	.11	.08	.06									
110	.31	.25	.20	.16	.13	.11	.08	.06							
120	.38	.31	.26	.21	.19	.16	.13	.11	.08	.06					
130	.45	.38	.33	.28	.25	.21	.19	.16	.13	.11	.06				
140	.53	.45	.40	.34	.31	.28	.25	.21	.19	.16	.11	.06			
150	.61	.53	.45	.41	.38	.34	.31	.28	.25	.21	.16	.11	.06		
160	.69	.61	.53	.49	.45	.41	.38	.34	.31	.28	.21	.16	.11	.06	
170	.77	.69	.61	.57	.53	.49	.45	.41	.38	.34	.28	.21	.16	.11	.06
180	.86	.77	.69	.65	.61	.57	.53	.49	.45	.41	.34	.28	.21	.16	.11
190	.95	.86	.78	.73	.69	.65	.61	.57	.53	.49	.41	.34	.28	.21	.16
200	1.05	.95	.86	.82	.77	.73	.69	.65	.61	.57	.49	.41	.34	.28	.21
210	1.14	1.05	.95	.91	.86	.82	.77	.73	.69	.65	.57	.49	.41	.34	.28
▶ 215 (STD.)	1.19	1.09	1.00	.95	.91	.86	.82	.77	.73	.69	.61	.53	.45	.38	.31
220	1.24	1.14	1.05	1.00	.95	.91	.86	.82	.77	.73	.65	.57	.49	.41	.34
230	1.34	1.24	1.14	1.09	1.05	1.00	.95	.91	.86	.82	.73	.65	.57	.49	.41
240	1.44	1.34	1.25	1.19	1.14	1.09	1.05	1.00	.95	.91	.82	.73	.65	.57	.49
250	1.55	1.44	1.34	1.29	1.24	1.19	1.14	1.09	1.05	1.00	.91	.82	.73	.65	.57
260	1.66	1.55	1.44	1.39	1.34	1.29	1.24	1.19	1.14	1.09	1.00	.91	.82	.73	.65
270	1.76	1.66	1.55	1.50	1.44	1.39	1.34	1.29	1.24	1.19	1.09	1.00	.91	.82	.73
280	1.87	1.76	1.66	1.60	1.55	1.50	1.44	1.39	1.34	1.29	1.19	1.09	1.00	.91	.82
290	1.99	1.87	1.76	1.71	1.66	1.60	1.55	1.50	1.44	1.39	1.29	1.19	1.09	1.00	.91
300	2.10	1.99	1.87	1.82	1.76	1.71	1.66	1.60	1.55	1.50	1.39	1.29	1.19	1.09	1.00

CORRECTION FACTORS FOR STEAM PRESSURES AND AIR TEMPERATURES OTHER THAN STANDARD

STEAM PRESSURE		ENTERING AIR TEMPERATURE °F														
GAUGE	ABS. PSI	TEMP. °F	45	55	STD 65	70	75	80	85	90	100	110	120	130	140	150
(VAC) 15" HG	7.32	178.9	0.90	0.80	0.70	0.65	0.60	0.56	0.51	0.45	0.39	0.32	0.25	0.18	0.13	0.08
(VAC) 10"	9.78	192.2	1.02	0.91	0.81	0.76	0.71	0.66	0.62	0.55	0.48	0.40	0.33	0.26	0.20	0.14
(VAC) 5"	12.25	202.9	1.11	1.00	0.90	0.85	0.79	0.75	0.70	0.63	0.56	0.48	0.40	0.33	0.27	0.20
0 PSI	14.696	212.0	1.19	1.09	0.97	0.92	0.87	0.82	0.77	0.70	0.63	0.54	0.46	0.38	0.31	0.25
▶ .899	15.595	215.0	1.22	1.11	1.00	0.95	0.90	0.84	0.80	0.75	0.65	0.57	0.48	0.40	0.33	0.26
5	19.70	227.1	1.34	1.22	1.11	1.05	1.00	0.95	0.90	0.81	0.75	0.66	0.57	0.49	0.41	0.34
10	24.70	239.4	1.45	1.33	1.22	1.17	1.11	1.05	1.00	0.91	0.85	0.75	0.66	0.58	0.50	0.42
15	29.70	249.8	1.55	1.43	1.31	1.26	1.20	1.14	1.09	1.00	0.94	0.84	0.75	0.66	0.57	0.49
20	34.70	258.5	1.63	1.52	1.40	1.33	1.28	1.23	1.17	1.07	1.02	0.92	0.82	0.73	0.64	0.55
25	39.70	266.8	1.71	1.59	1.47	1.41	1.36	1.30	1.25	1.15	1.09	0.98	0.89	0.80	0.71	0.62
30	44.70	274.0	1.78	1.66	1.54	1.48	1.42	1.37	1.31	1.21	1.15	1.05	0.95	0.85	0.76	0.68
40	54.70	286.7	1.91	1.79	1.66	1.61	1.54	1.49	1.43	1.32	1.27	1.16	1.06	0.97	0.87	0.78
50	64.70	297.7	2.02	1.90	1.77	1.71	1.65	1.60	1.54	1.42	1.37	1.26	1.16	1.06	0.96	0.87
60	74.70	307.3	2.10	2.00	1.87	1.81	1.75	1.69	1.63	1.51	1.47	1.35	1.25	1.15	1.05	0.95
70	84.70	316.0	2.20	2.09	1.95	1.89	1.83	1.77	1.71	1.59	1.55	1.44	1.33	1.23	1.12	1.03
80	94.70	323.9	2.27	2.17	2.03	1.97	1.91	1.85	1.80	1.69	1.63	1.52	1.41	1.31	1.20	1.10
90	104.70	331.2	2.36	2.24	2.11	2.05	1.98	1.93	1.87	1.74	1.70	1.59	1.48	1.38	1.28	1.17
100	114.70	337.9	2.43	2.31	2.18	2.11	2.05	2.00	1.94	1.81	1.77	1.65	1.54	1.44	1.33	1.23
125	139.70	352.9	2.59	2.47	2.33	2.27	2.21	2.16	2.10	1.96	1.92	1.80	1.69	1.59	1.48	1.38
150	164.70	365.9	2.73	2.62	2.47	2.43	2.35	2.29	2.23	2.08	2.05	1.94	1.82	1.72	1.61	1.51
175	189.70	377.4	2.86	2.74	2.60	2.54	2.47	2.41	2.35	2.21	2.17	2.05	1.95	1.85	1.73	1.63
200	214.70	387.8	2.95	2.85	2.71	2.63	2.58	2.52	2.47	2.31	2.29	2.17	2.06	1.96	1.84	1.75

From Keenan and Keyes — Linear Interpolation. NOTE: Gauge pressure should be corrected for altitude.

Rate of pitch for steam ½"drop over 20-foot run.

Design Data

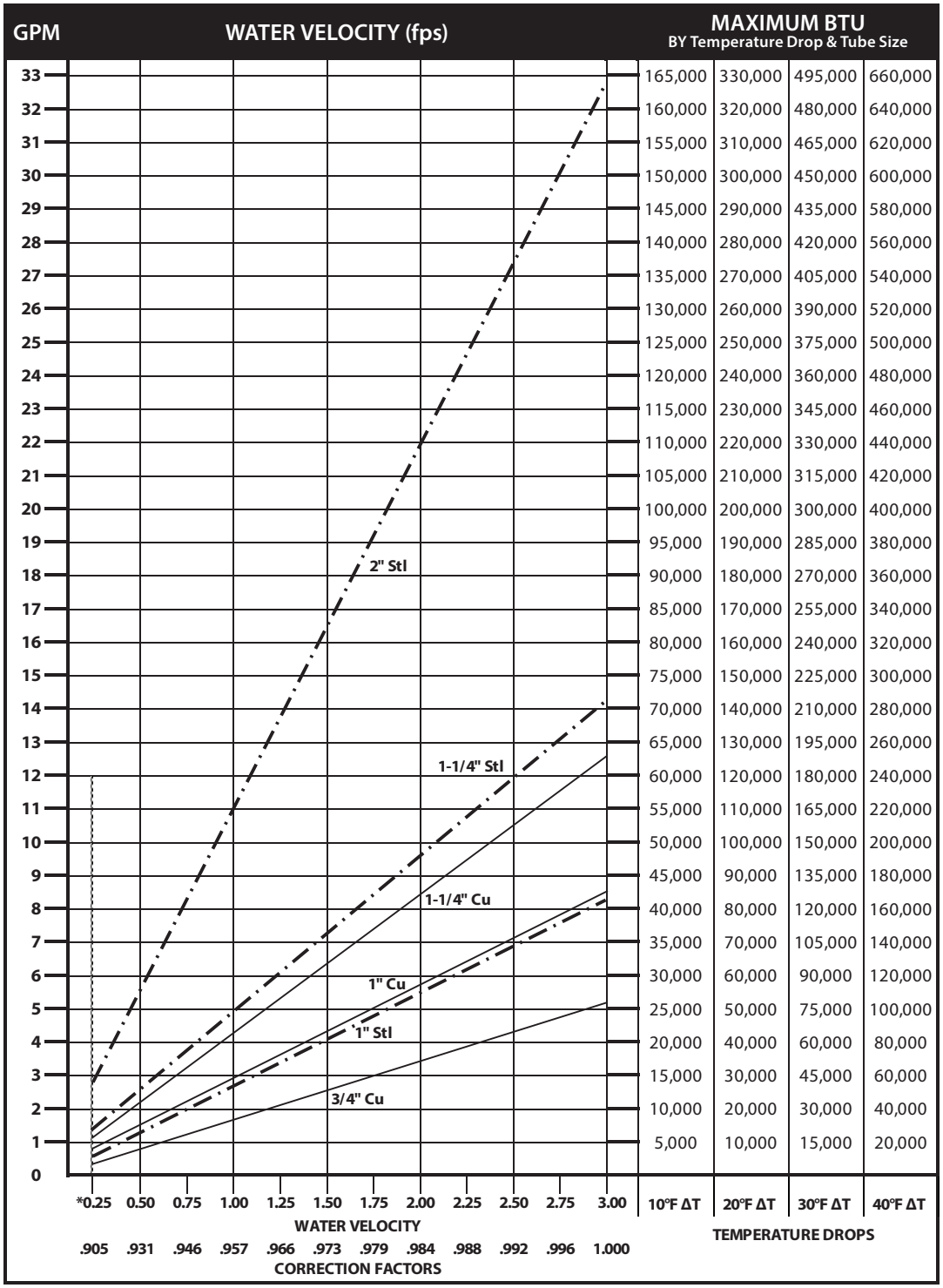

GPM	10°F ΔT	20°F ΔT	30°F ΔT	40°F ΔT
33	165,000	330,000	495,000	660,000
32	160,000	320,000	480,000	640,000
31	155,000	310,000	465,000	620,000
30	150,000	300,000	450,000	600,000
29	145,000	290,000	435,000	580,000
28	140,000	280,000	420,000	560,000
27	135,000	270,000	405,000	540,000
26	130,000	260,000	390,000	520,000
25	125,000	250,000	375,000	500,000
24	120,000	240,000	360,000	480,000
23	115,000	230,000	345,000	460,000
22	110,000	220,000	330,000	440,000
21	105,000	210,000	315,000	420,000
20	100,000	200,000	300,000	400,000
19	95,000	190,000	285,000	380,000
18	90,000	180,000	270,000	360,000
17	85,000	170,000	255,000	340,000
16	80,000	160,000	240,000	320,000
15	75,000	150,000	225,000	300,000
14	70,000	140,000	210,000	280,000
13	65,000	130,000	195,000	260,000
12	60,000	120,000	180,000	240,000
11	55,000	110,000	165,000	220,000
10	50,000	100,000	150,000	200,000
9	45,000	90,000	135,000	180,000
8	40,000	80,000	120,000	160,000
7	35,000	70,000	105,000	140,000
6	30,000	60,000	90,000	120,000
5	25,000	50,000	75,000	100,000
4	20,000	40,000	60,000	80,000
3	15,000	30,000	45,000	60,000
2	10,000	20,000	30,000	40,000
1	5,000	10,000	15,000	20,000
0				

*Do not design below .25 fps.

DYNAMIC FORMULAS

$$BTU = GPM \times 500 \times TD$$

$$GPM = \left(\frac{BTU}{500}\right) \div TD$$

$$TD = \left(\frac{BTU}{500}\right) \div GPM$$

Pressure Drop at Given Water Velocities (Feet of Water per 100 ft. of pipe) based on Hazen - Williams calculation

Nominal Pipe Size	Water Velocity (ft/sec)											
	0.25	0.50	0.75	1.00	1.25	1.50	1.75	2.00	2.25	2.50	2.75	3.00
3/4" Copper	0.06	0.20	0.42	0.72	1.09	1.53	2.04	2.61	3.25	3.95	4.71	5.53
1" Copper	0.04	0.15	0.32	0.54	0.81	1.14	1.52	1.94	2.42	2.94	3.50	4.11
1 1/4" Copper	0.03	0.12	0.25	0.43	0.64	0.90	1.20	1.54	1.92	2.33	2.78	3.26
1" Steel	0.04	0.15	0.32	0.54	0.81	1.14	1.52	1.95	2.42	2.94	3.51	4.12
1 1/4" Steel	0.03	0.11	0.23	0.40	0.60	0.84	1.12	1.44	1.79	2.17	2.59	3.05
2" Steel	0.02	0.07	0.14	0.25	0.37	0.52	0.69	0.89	1.10	1.34	1.60	1.88

Design Data

GUARANTEED WORKING PRESSURES

1" IPS — 780 at Temperatures up to 650˚F.
1-1/4" IPS — 660 at Temperatures up to 650˚F.
2" IPS — 405 at Temperatures up to 650˚F.
1-1/4" CU — 194 at Temperatures up to 300˚F.
1" CU 204 at Temperatures up to 300˚F.
3/4" CU 218 PSI at Temperatures up to 300˚F.

MAXIMUM PRESSURES AT OTHER TEMPERATURES ARE AVAILABLE UPON REQUEST.

Pipe Water Capacities and Quantities Circulated at Velocity of 3 Feet Per Second

Nominal Pipe Size	Pipe I.D. (inches)	Gals Per Lin. Ft.	GPM @ 3' per sec Velocity
3/4" Copper	0.835	0.028	5.12
1" Copper	1.077	0.047	8.52
1 1/4" Copper	1.315	0.071	12.70
1" Steel	1.075	0.047	8.49
1 1/4" Steel	1.395	0.079	14.29
2" Steel	2.115	0.183	32.85

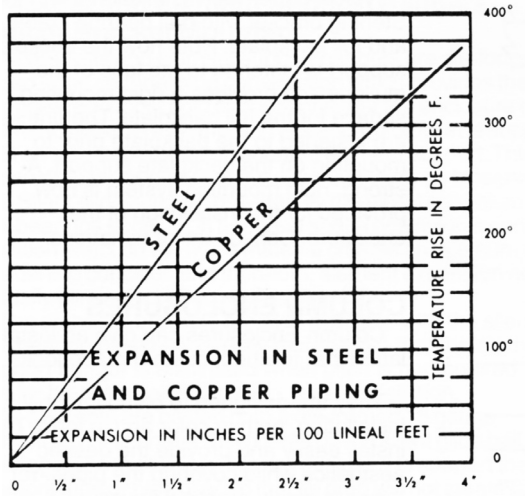

Glycol Correction Factors

Fluid Temperature 200°F

% Solution	Ethylene Glycol	Propylene Glycol
20	.952	.988
30	.921	.968
40	.888	.943
50	.852	.912

Fluid Temperature 180°F

% Solution	Ethylene Glycol	Propylene Glycol
20	.946	.982
30	.913	.961
40	.879	.934
50	.842	.902

Fluid Temperature 140°F

% Solution	Ethylene Glycol	Propylene Glycol
20	.934	.97
30	.898	.946
40	.861	.916
50	.821	.881

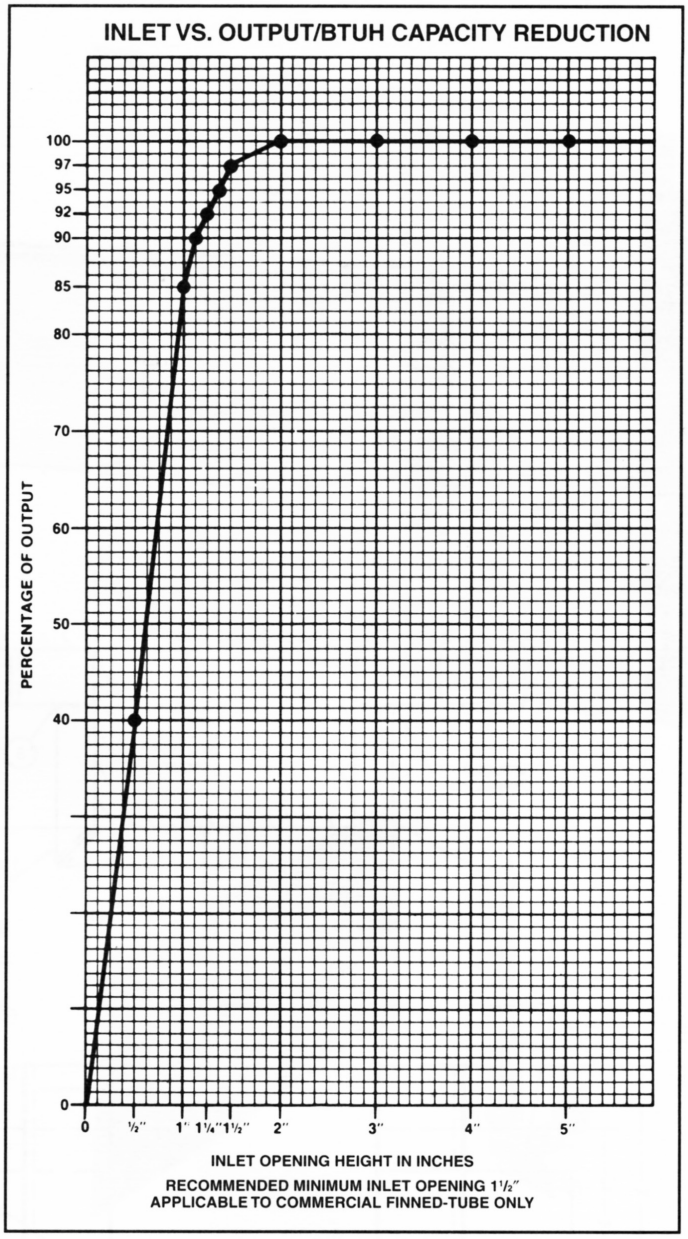

ALTITUDE FACTORS

Approximate factors for convective heat value at varying altitudes

Altitude	Ferrous Units	Copper Alum. Units
Sea Level	1.000	1,000
1,000 ft.	.984	.969
2,000 ft.	.968	.938
3,000 ft.	.952	.908
4,000 ft.	.936	.878
5,000 ft.	.920	.850
6,000 ft.	.904	.822
7,000 ft.	.889	.795
8,000 ft.	.874	.768
9,000 ft.	.859	.743
10,000 ft.	.844	.718
15,000 ft.	.771	.603
20,000 ft.	.703	.502